VERTICAL HANDLE CLAMPS

These are the smallest of the vertical handle toggle clamps. The U shaped hold down bar provides a selection of spindle positions. This model is ideal for light duty applications. Embossed handle grips are provided except for the T-bar model.

Spindle supplied: 832208
Holding capacity: 100 lbs. Maximum
60 lbs. Maximum on AHV153-LX
Movements: Handle 105°, Bar 60°

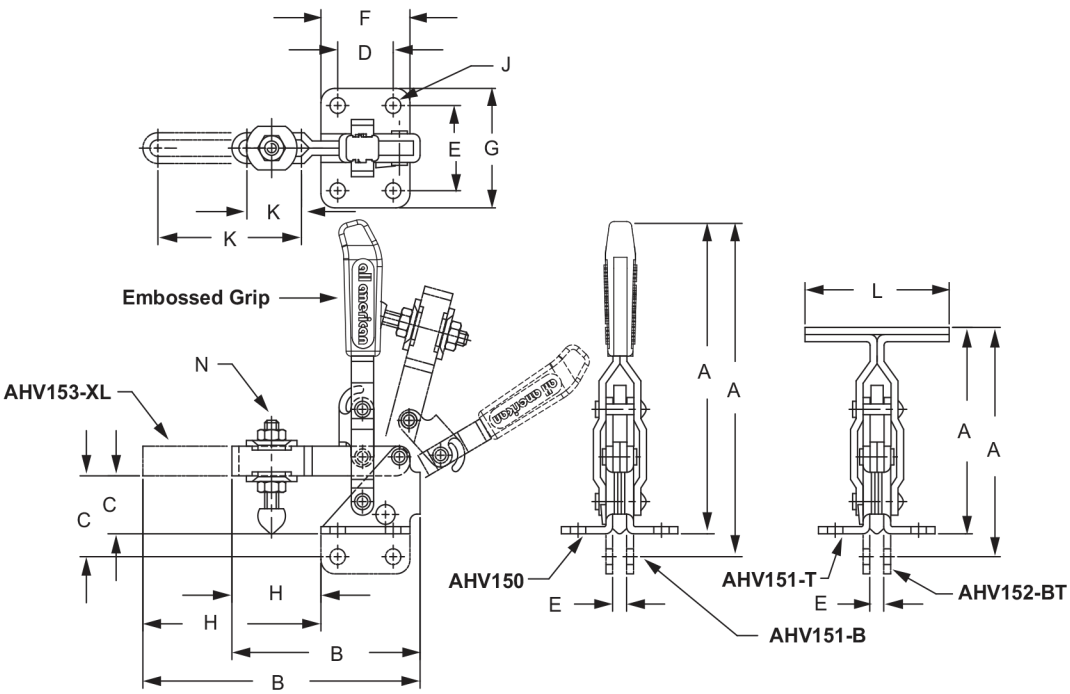

SERIES AHV150															
P/N	TYPE	A	A1	B	C	C1	D	E	F	G	H	J	K	L	N
AHV150	U, FB, SH	3.36	-	2.12	.63	-	.63	.94	1.00	1.31	1.00	.17	.61	-	8-32
AHV150-2S	U, FB, SH, 2S	3.36	-	2.12	.63	-	.63	.94	1.00	1.31	1.00	.17	.61	-	8-32
AHV-151-B	U, SB, SH	-	3.62	2.12	-	.89	.63	.16	1.00	-	1.00	.17	.61	-	8-32
AHV-151-B2S	U, SB, SH, 2S	-	3.62	2.12	-	.89	.63	.16	1.00	-	1.00	.17	.61	-	8-32
AHV151-BT	U, SB, TH	-	2.52	2.12	-	.89	.63	.16	1.00	-	1.00	.17	.61	1.81	8-32
AHV152-T	U, FB, TH	2.27	-	2.12	.63	-	.63	.94	1.00	1.31	1.00	.17	.61	1.81	8-32
AHV153-XL	U, HS, EL	3.36	-	3.13	.63	-	.63	.94	1.00	1.31	2.00	.17	1.65	-	8-32

VERTICAL HANDLE CLAMPS

This low profile model is one of a kind in toggle clamps design. Its unique handle can be operated from either side or from behind. This model provides considerable holding capacity considering its size, and is ideal for circuit board work and other light duty applications. The width of the handle is 1/4" wider than similar clamps on the market, which makes for better gripping.

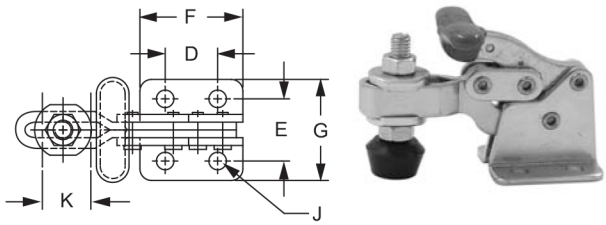

Spindle supplied: AHV200 - 508208
AHV300 - 825208
AHV400 - 105208

Movements: Handle 175°, Bar 92°

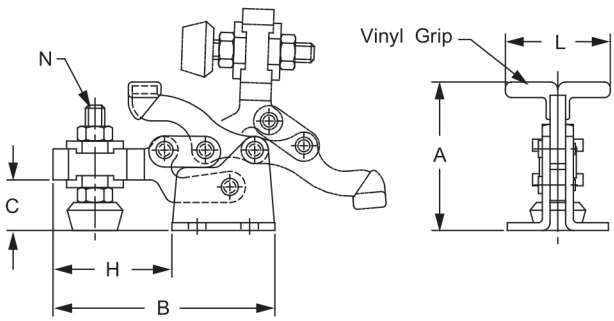

SERIES AHV200														
P/N	TYPE	A	B	C	D	E	F	G	H	J	K	L	N	HOLDING CAPACITY
AHV200	U, FB	1.57	2.25	.59	.53	.63	1.04	1.02	1.20	.18	.50	1.06	10-32	150 lbs
AHV200-2S	U, FB, 2S	1.57	2.25	.59	.53	.63	1.04	1.02	1.20	.18	.50	1.06	10-32	150 lbs
AHV300	U, FB	2.46	3.68	.87	.91	1.14	1.73	1.81	1.95	.26	.75	1.97	15/16-18	330 lbs
AHV300-2S	U, FB, 2S	2.46	3.68	.87	.91	1.14	1.73	1.81	1.95	.26	.75	1.97	15/16-18	330 lbs
AHV400	U, FB	3.68	5.14	1.30	1.38	1.50	2.52	2.48	2.62	.33	1.06	2.76	3/8-16	750 lbs
AHV400-2S	U, FB, 2S	3.68	5.14	1.30	1.38	1.50	2.52	2.48	2.62	.33	1.06	2.76	3/8-16	750 lbs

This model is similar to model AHV200 but has the addition of a release lock to hold the clamp in place. This model provides considerable holding capacity considering its size, and is ideal for circuit board work and other light duty applications. The width of the handle is 1/4" wider than similar clamps on the market, which makes for better gripping.

RELEASE-LOCK®

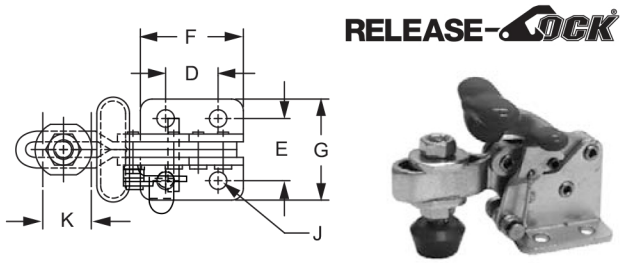

Spindle supplied: AHV200-RL - 508208
AHV300-RL - 825208
AHV400-RL - 105208

Movements: Handle 175°, Bar 92°

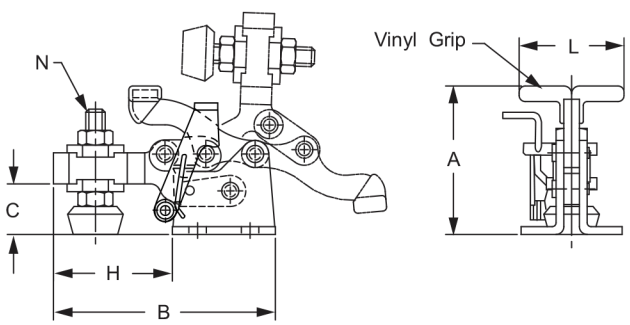

SERIES AHV200-RL														
P/N	TYPE	A	B	C	D	E	F	G	H	J	K	L	N	HOLDING CAPACITY
AHV200-RL	U, FB, RL	1.57	2.25	.59	.53	.63	1.04	1.02	1.20	.18	.50	1.06	10-32	150 lbs
AHV300-RL	U, FB, RL	2.46	3.68	.87	.91	1.14	1.73	1.81	1.95	.26	.75	1.97	5/16-18	330 lbs
AHV400-RL	U, FB, RL	3.68	5.14	1.30	1.38	1.50	2.52	2.48	2.62	.33	1.06	2.76	3/8-16	750 lbs

This model is similar to model AHV150, but offers twice the holding capacity. The hold-down bar is designed to accept the spindle assembly in a fixed position located at the end of the bar. Embossed handle grips are provided except for the T-bar model. Stainless steel models are supplied with stainless steel spindles.

Spindle supplied: 420208 (steel)
420136-2S (stainless steel)
Holding capacity: 200 lbs. Maximum
Movements: Handle 65°, Bar 115°

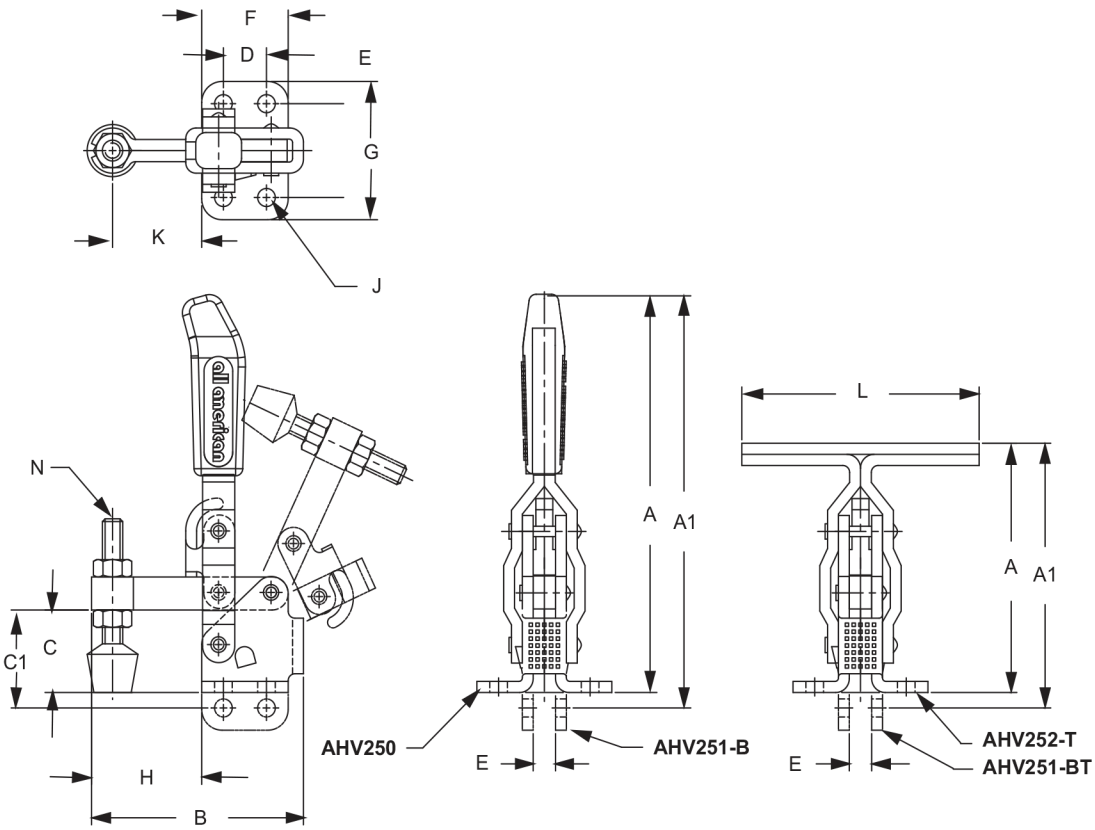

SERIES AHV250															
P/N	TYPE	A	A1	B	C	C1	D	E	F	G	H	J	K	L	N
AHV250	FS, FB, SH	4.36	-	2.46	.94	-	.50	1.06	1.00	1.57	1.28	.20	1.04	-	1/4-20
AHV250-2S	FS, FB, SH, 2S	4.36	-	2.46	.94	-	.50	1.06	1.00	1.57	1.28	.20	1.04	-	1/4-20
AHV251-B	FS, SB, SH	-	4.54	2.46	-	1.12	.50	.25	1.00	-	1.28	.20	1.04	-	1/4-20
AHV251-B2S	FS, SB, SH, 2S	-	4.54	2.46	-	1.12	.50	.25	1.00	-	1.28	.20	1.04	-	1/4-20
AHV251-BT	FS, SB, TH	-	3.00	-	-	1.12	.50	.25	1.00	-	1.28	.20	1.04	2.76	1/4-20
AHV252-T	FS, FB, TH	2.82	-	2.46	94	-	.50	1.06	1.00	1.57	1.28	.20	1.04	2.76	1/4-20

VERTICAL HANDLE CLAMPS

This model is similar to model AHV250 but with an adjustable spindle position. Embossed handle grips are provided except for the T-bar model. Stainless steel models are supplied with a stainless steel hex head spindle.

Spindle supplied: 420208 (steel)
420136-2S (stainless steel)

Movements: Handle 65°, Bar 115°

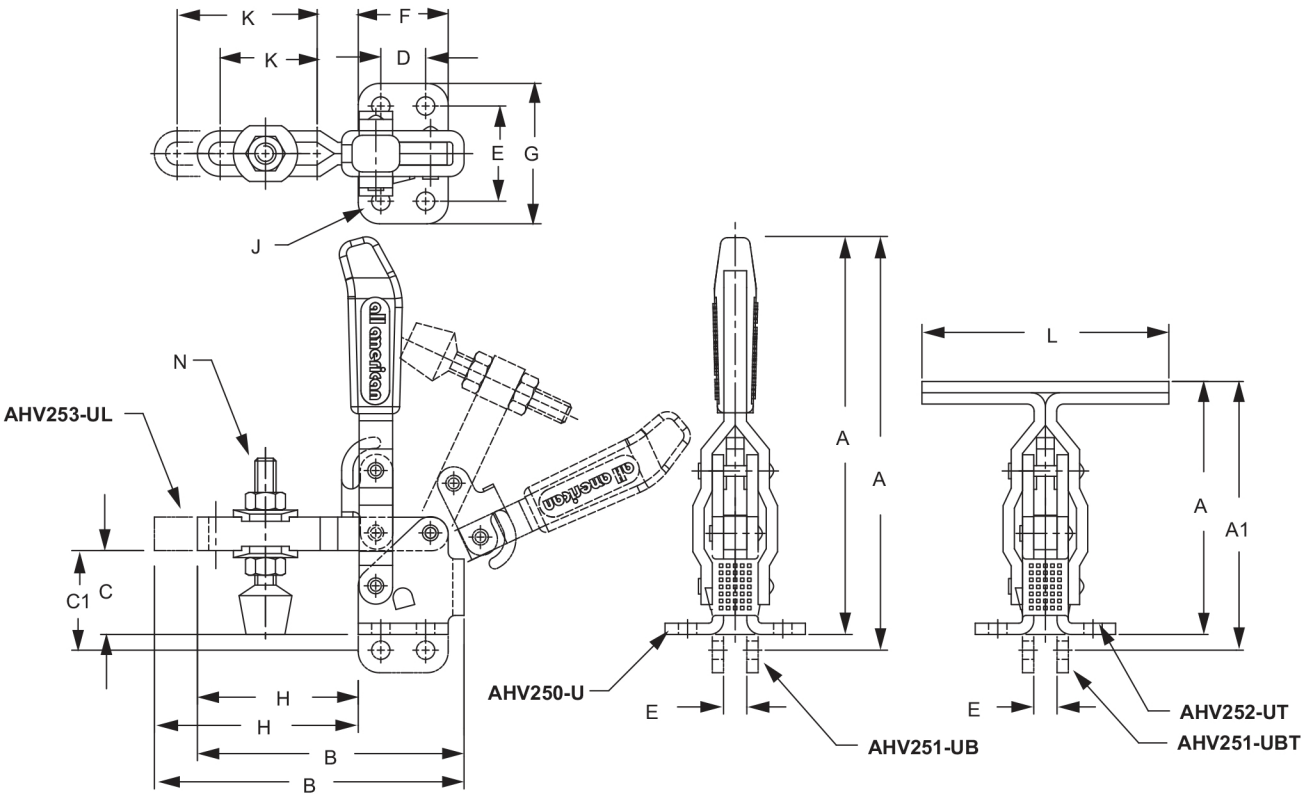

SERIES AHV250-U																
P/N	TYPE	A	A1	B	C	C1	D	E	F	G	H	J	K	L	N	HOLDING CAPACITY
AHV250-U	U, FB, SH	4.36	-	2.98	.94	-	.50	1.06	1.00	1.57	1.80	.20	1.08	-	1/4-20	200 lbs
AHV250-U2S	U, FB, SH, 2S	4.36	-	2.98	.94	-	.50	1.06	1.00	1.57	1.80	.20	1.08	-	1/4-20	200 lbs
AHV251-UB	U, SB, SH	-	4.54	2.98	-	1.12	.50	.25	1.00	-	1.80	.20	1.08	-	1/4-20	200 lbs
AHV251-UBT	U, SB, TH	-	3.00	2.98	-	1.12	.50	.25	1.00	-	1.80	.20	1.08	2.76	1/4-20	200 lbs
AHV252-UT	U, FB, TH	2.82	-	2.98	.94	-	.50	1.06	1.00	1.57	1.80	.20	1.08	2.76	1/4-20	200 lbs
AHV253-UL	U, FB, SH, L	4.36	-	3.46	.94	-	.50	1.06	1.00	1.57	2.28	.20	1.56	-	1/4-20	200 lbs
AHV253-UL2S	U, FB, SH, L, 2S	4.36	-	3.46	.94	-	.50	1.06	1.00	1.57	2.28	.20	1.56	-	1/4-20	110 lbs

www.allamericanbushing.com • sales@allamericanbushing.com • (661) 295-2929 • (661) 295-4933 • Fax: (661) 295-0909

VERTICAL HANDLE CLAMPS

This model is the most popular models in the vertical series. It offers the largest selection of features to meet most applications. The solid bar version is furnished with a bolt retainer.

Spindle supplied: 518208
Movements: Handle 56°, Bar 100°

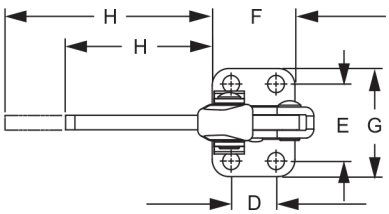

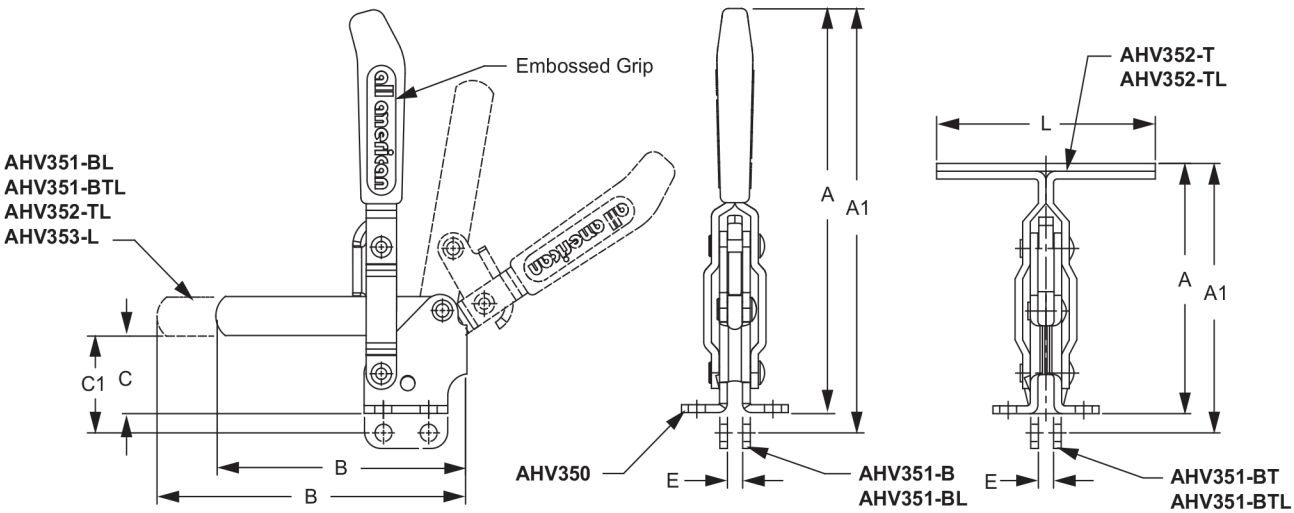

SERIES AHV350															
P/N	TYPE	A	A1	B	C	C1	D	E	F	G	H	J	L	SPINDLE TH'D	HOLDING CAPACITY
AHV350	S, FB, SH	6.48	-	4.13	1.25	-	.75	1.25	1.38	1.76	2.44	.28	-	5/16-18	496 lbs
AHV351-B	S, SB, SH	-	6.80	4.13	-	1.56	.75	.25	1.38	-	2.44	.28	-	5/16-18	496 lbs
AHV351-BT	S, SB, TH	-	4.31	4.13	-	1.56	.75	.25	1.38	-	2.44	.28	3.62	5/16-18	496 lbs
AHV351-BL	L, S, SB, SH	-	6.80	5.13	-	1.56	.75	.25	1.38	-	3.44	.28	-	5/16-18	245 lbs
AHV351-BTL	L, S, SB, TH	-	4.31	5.13	-	1.56	.75	.25	1.38	-	3.44	.28	3.62	5/16-18	245 lbs
AHV352-T	S, FB, TH	4.00	-	4.13	1.25	-	.75	1.25	1.38	1.76	2.44	.28	3.62	5/16-18	496 lbs
AHV352-TL	L, S, FB, TH	4.00	-	5.13	1.25	-	.75	1.25	1.38	1.76	3.44	.28	3.62	5/16-18	245 lbs
AHV353-L	L, S, FB, SH	6.48	-	5.13	1.25	-	.75	1.25	1.38	1.76	3.44	.28	-	5/16-18	245 lbs

VERTICAL HANDLE CLAMPS

This model is similar to model AHV350 but features an u-bar. It offers the largest selection of features to meet most applications. This U-bar version is furnished with spindle assemblies and flange washers. The stainless steel version is supplied with a stainless steel hex head spindle.

Spindle supplied: 518208 (steel)
518205-2S (stainless steel)

Movements: Handle 58°, Bar 100°

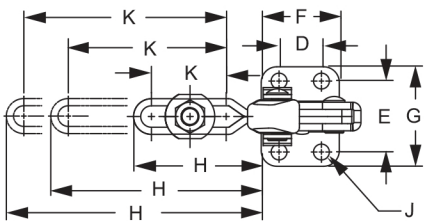

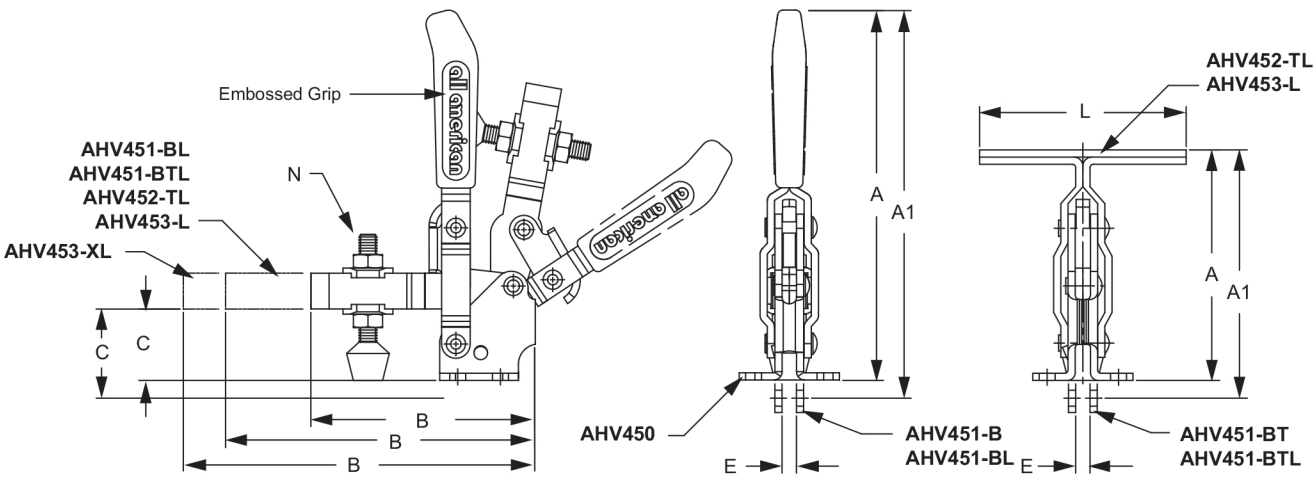

SERIES AHV450																
P/N	TYPE	A	A1	B	C	C1	D	E	F	G	H	J	K	L	N	HOLDING CAPACITY
AHV450	U, FB, SH	6.48	-	3.93	1.25	-	.75	1.25	1.38	1.76	2.25	.28	1.32	-	5/16-18	496 lbs
AHV450-2S	U, FB, SH, 2S	6.48	-	3.93	1.25	-	.75	1.25	1.38	1.76	2.25	.28	1.32	-	5/16-18	496 lbs
AHV451-B	U, SB, SH	-	6.80	3.93	-	1.56	.75	.25	1.38	-	2.25	.28	1.32	-	5/16-18	496 lbs
AHV451-B2S	U, SB, SH, 2S	-	6.80	3.93	-	1.56	.75	.25	1.38	-	2.25	.28	1.32	-	5/16-18	496 lbs
AHV451-BT	U, SB, TH	-	4.31	3.93	-	1.56	.75	.25	1.38	-	2.25	.28	1.32	3.62	5/16-18	496 lbs
AHV451-BL	L, U, SB, SH	-	6.80	5.42	-	1.56	.75	.25	1.38	-	2.25	.28	1.32	-	5/16-18	496 lbs
AHV451-BTL	L, U, SB, TH	-	4.31	5.42	-	1.56	.75	.25	1.38	-	3.75	.28	2.80	3.62	5/16-18	220 lbs
AHV452-T	U, FB, TH	4.00	-	3.93	1.25	-	.75	1.25	1.38	1.76	2.25	.28	1.32	3.62	5/16-18	496 lbs
AHV452-TL	L, U, FB, TH	4.00	-	5.42	1.25	-	.75	1.25	1.38	1.76	3.75	.28	2.80	3.62	5/16-18	220 lbs
AHV453-L	L, U, FB, SH	6.48	-	5.42	1.25	-	.75	1.25	1.38	1.76	3.75	.28	2.80	-	5/16-18	220 lbs
AHV453-XL	L, U, FB, SH	6.48	-	6.16	1.25	-	.75	1.25	1.38	1.76	4.49	.28	3.54	-	5/16-18	176 lbs

VERTICAL HANDLE CLAMPS

This model series is ideal for many applications due to its size and outside holding capacity. The hold-down bar will accept all 3/8" spindles. All solid bar models are supplied with bolt retainers. The bushings and removable ground pins are case hardened.

Spindle Supplied: 316208
Holding capacity: 750 lbs. Maximum
Movements: Handle 58°, Bar 105°

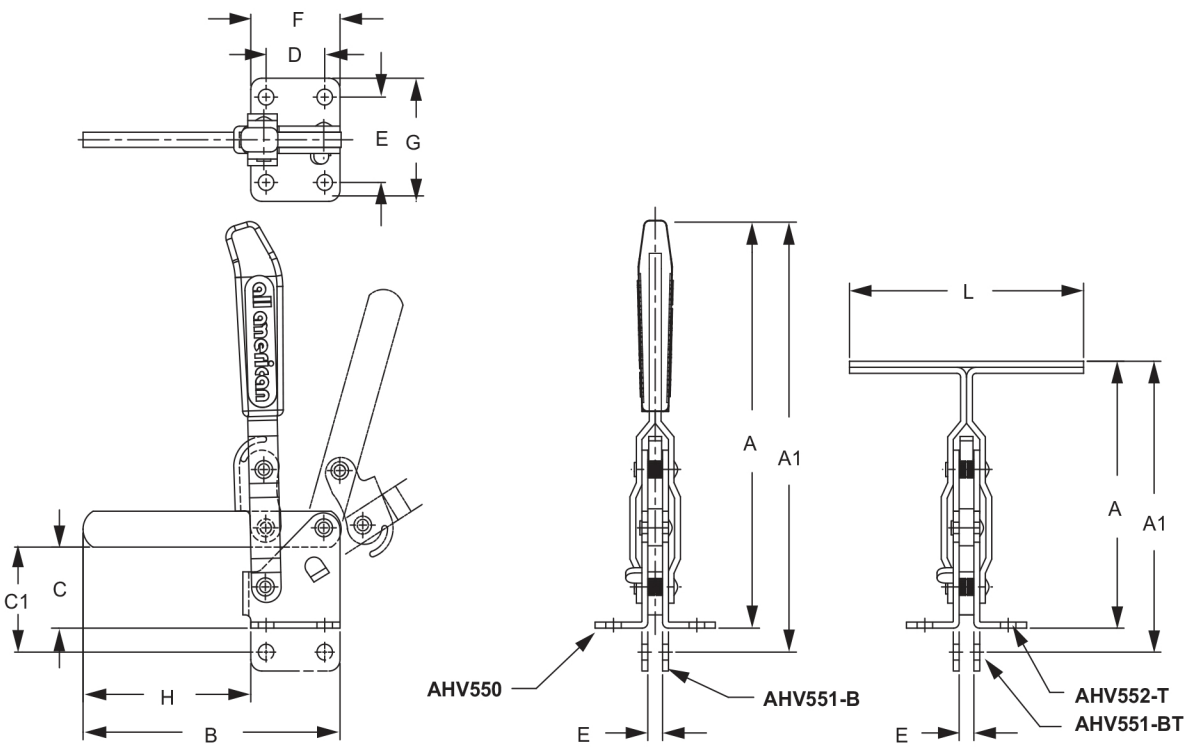

SERIES AHV550														
P/N	TYPE	A	A1	B	C	C1	D	E	F	G	H	J	L	SPINDLE TH'D
AHV550	S, FB, SH	8.30	-	5.49	1.69	-	1.25	1.78	1.91	2.57	3.58	.33	-	3/8-16
AHV551-B	S, SB, SH	-	8.81	5.49	-	2.19	1.25	.31	1.91	-	3.58	.33	-	3/8-16
AHV551-BT	S, SB, TH	-	6.06	5.49	-	2.19	1.25	.31	1.91	-	3.58	.33	5.00	3/8-16
AHV552-T	S, FB, TH	5.55	-	5.49	1.69	-	1.25	1.78	1.91	2.57	3.58	.33	5.00	3/8-16

VERTICAL HANDLE CLAMPS

This model series is like the AHV550 series but with a U-bar. They are ideal for many applications due to its size and outside holding capacity. The hold-down bar will accept all 3/8" spindles. The U-bar models are supplied with flanged washers. The bushings and removable ground pins are case hardened.

Spindle Supplied: 316208
Holding capacity: 750 lbs. Maximum
Movements: Handle 58°, Bar 106°

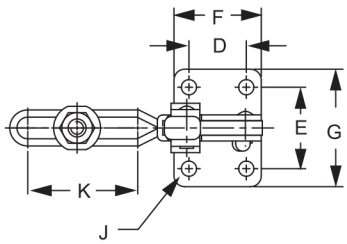

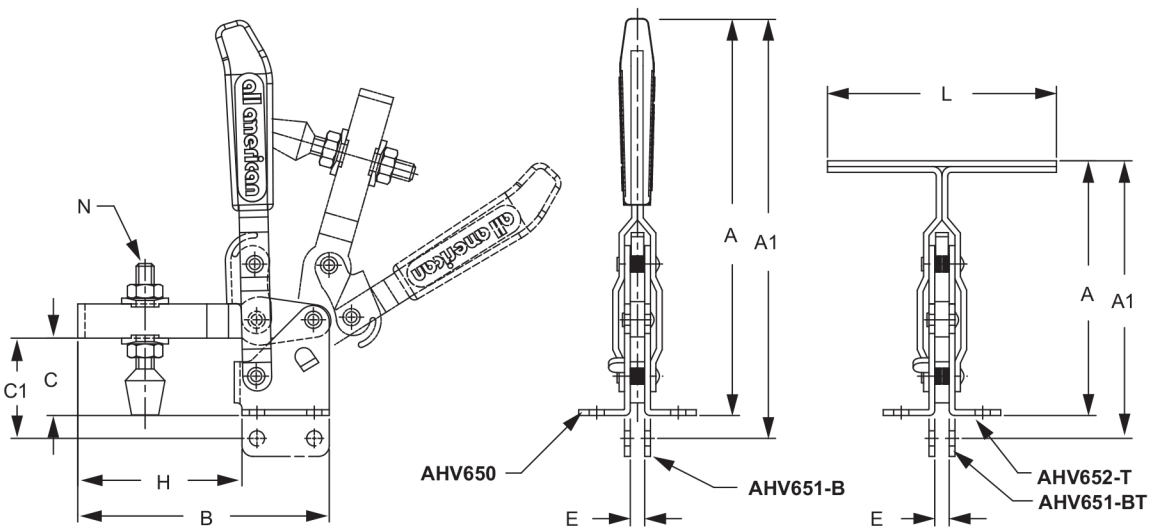

SERIES AHV650															
P/N	TYPE	A	A1	B	C	C1	D	E	F	G	H	J	K	L	N
AHV650	U, FB. SH	8.30	-	5.49	1.69	-	1.25	1.78	1.91	2.57	3.58	.33	2.40	-	3/8-16
AHV651-B	U, SB. SH	-	8.81	5.49	-	2.19	1.25	.31	1.91	-	3.58	.33	2.40	-	3/8-16
AHV651-BT	U, SB. TH	-	6.06	5.49	-	2.19	1.25	.31	1.91	-	3.58	.33	2.40	5.00	3/8-16
AHV652-T	U, FB. TH	5.55	-	5.49	1.69	-	1.25	1.78	1.91	2.57	3.58	.33	2.40	5.00	3/8-16

These heavy duty models have many features such as super smooth movement and a hole with a roll pin which provides the user with a choice of handle or bar movement. A bolt retainer is furnished with the solid bar models, and flange washers are furnished with the U bar models. The hold-down bar will accept 5/8" spindles. Spindles can be ordered separately.

AHV750-850:
Holding capacity: 1,000 lbs. Maximum
Movements: Handle 67°, Bar 120°

AHV950-1050:
Holding capacity: 1,200 lbs. Maximum
Movements: Handle 70, Bar 140°

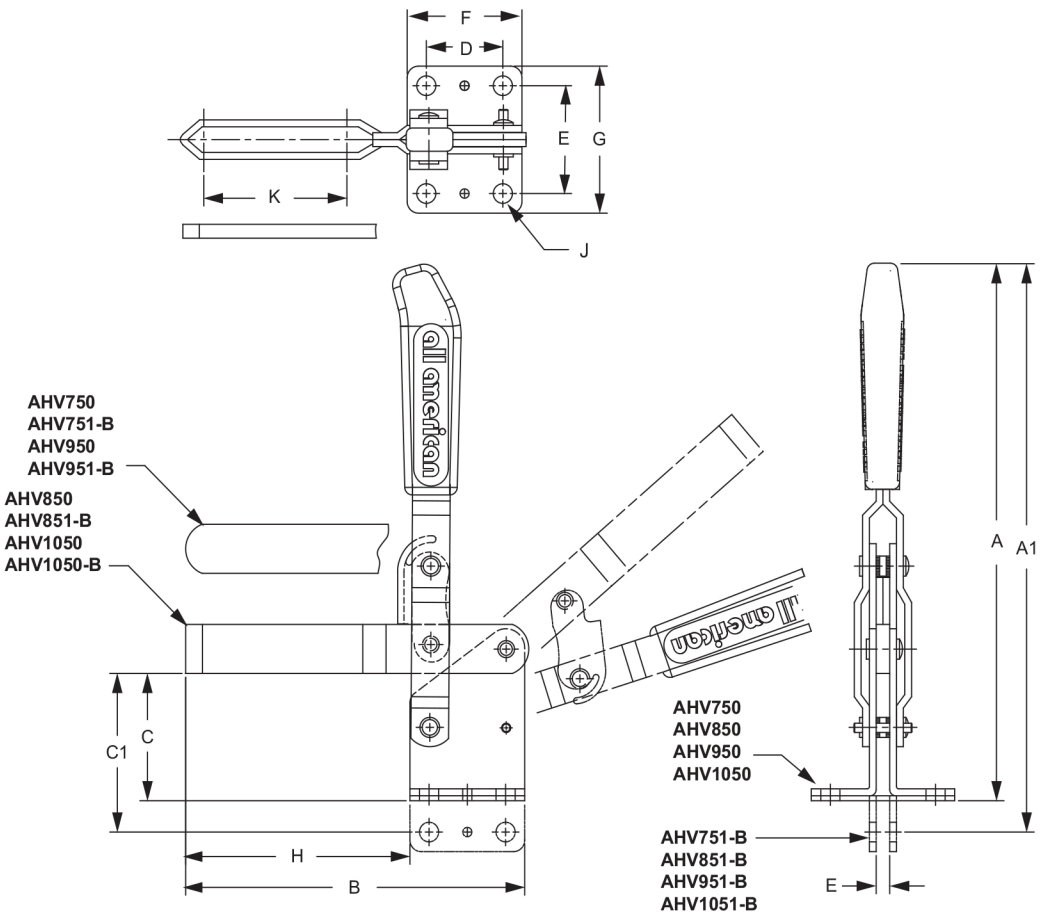

SERIES AHV750, AHV850, AHV950, AHV1050													
P/N	TYPE	A	A1	B	C	C1	D	E	F	G	H	J	K
AHV750	S, FB, SH	9.33	-	7.00	2.00	-	1.25	1.78	2.00	2.53	5.00	.34	-
AHV750-B	S, SB, SH	-	9.56	7.00	-	2.22	1.25	.35	2.00	-	5.00	.34	-
AHV850	U, FB, SH	9.33	-	7.00	2.00	-	1.25	1.78	2.00	2.53	5.00	.34	3.23
AHV850-B	U, SB, SH	-	9.56	7.00	-	2.22	1.25	.35	2.00	-	5.00	.34	3.23
AHV950	S, FB, SH	12.65	-	8.87	3.25	-	2.00	2.75	3.00	3.74	5.87	.50	-
AHV951-B	S, SB, SH	-	13.44	8.87	-	4.04	2.00	.35	3.00	-	5.87	.50	-
AHV1050	U, FB, SH	12.65	-	8.87	3.25	-	2.00	2.75	3.00	3.74	5.87	.50	3.74
AHV1051-B	U, SB, SH	-	13.44	8.87	-	4.04	2.00	.35	3.00	-	5.87	.50	3.74